# DA 50

## Differential pressure controller with adjustable set-point

TA

Pressurisation & Water Quality › Balancing & Control › Thermostatic Control

ENGINEERING ADVANTAGE

These differential pressure controllers for heating and cooling systems are particularly effective in situations requiring high temperatures and/or pressure drop. Also suitable for use on the secondary side in district heating and comfort cooling systems. Ductile iron body - painted with duasolid that offers good rust protection.

**› Special internal geometry**
Allows big pressure drop without noise.

**› Adjustable set-point**
Delivers desired differential pressure ensuring accurate balancing.

# › Technical description

**Application:**
Heating and cooling systems with variable flow.
District heating substations, primary side.

**Functions:**
Differential pressure control over the load.
Closes at increasing Δp.

**Dimensions:**
DN 32-200

**Pressure class:**
PN 16 and PN 25

**Max. differential pressure (ΔpV):**
1600 kPa = 16 bar

**Setting range:**
Δp is adjustable within 10-60 kPa, 50-150 kPa, 130-250 kPa and 100-400 kPa.
Delivery setting: 10 kPa, 50 kPa, 130 kPa and 100 kPa.

**Temperature:**
Max. working temperature: 120°C
Min. working temperature: -10°C

**Media:**
Water and neutral fluids, water-glycol mixtures.

**Material:**
Valve body: Ductile iron EN-GJS-400
Actuator body: Ductile iron EN-GJS-400
Diaphragm: EPDM
Valve seat: Stainless steel.
Valve plug: Stainless steel with EPDM insert.

**Surface treatment:**
Duasolid painting.

**Marking:**
TA, DN, PN and flow direction arrow.

**Flanges:**
According to EN-1092-2:1997, type 21.

# Operating function

The controller consists of a valve (1) and a diaphragm actuator (3). The valve is protected against overload with a safety spring (2). The pressure upstream of the load acts through an external capillary pipe (Δp+) to the bottom side of the diaphragm and attempts to close the valve.
The pressure downstream of the load acts through an internal capillary pipe (Δp-) to the top of the diaphragm and attempts to open the valve together with the force of the working spring (5).
Provided the forces on the diaphragm are balanced, the valve's plug stands still. If the differential pressure rises, the valve closes until a new balance is reached, and vice versa.

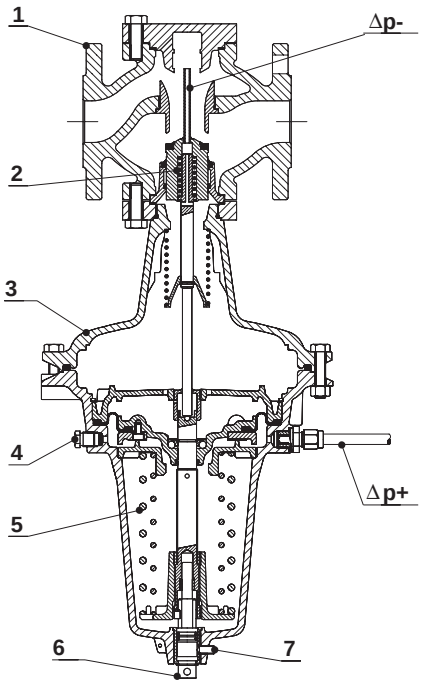


**1.** Valve
**2.** Safety spring
**3.** Diaphragm actuator
**4.** Venting screws
**5.** Working spring
**6.** Adjustment screw
**7.** Fixing screw

# Application example

**Keeping the differential pressure over a control valve constant**

**Heat exchanger**
The controller should be mounted downstream the control valve and STAF upstream the control valve, but downstream of the heat exchanger.
STAF can be mounted in the supply pipe, but with a decreased valve authority as a consequence.

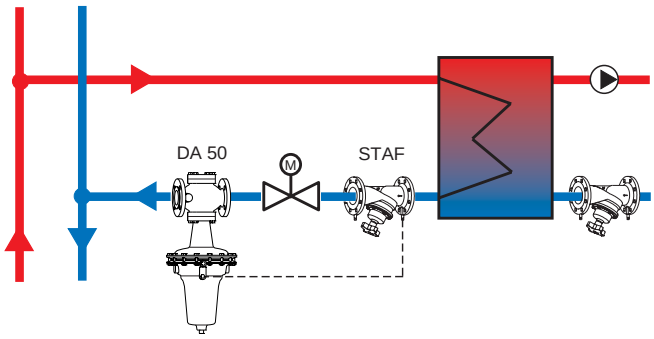

# Sizing

**1.** Select the smallest size for the designed flow according to the diagram.
**2.** Check that the available Δp is bigger than the pressure drop of the DA 50 at the designed flow. The pressure drop can be found in the diagram or calculated by the formula:

$$\Delta p = \left( \frac{q}{100 \times Kvs} \right)^2 \qquad [kPa, l/h]$$

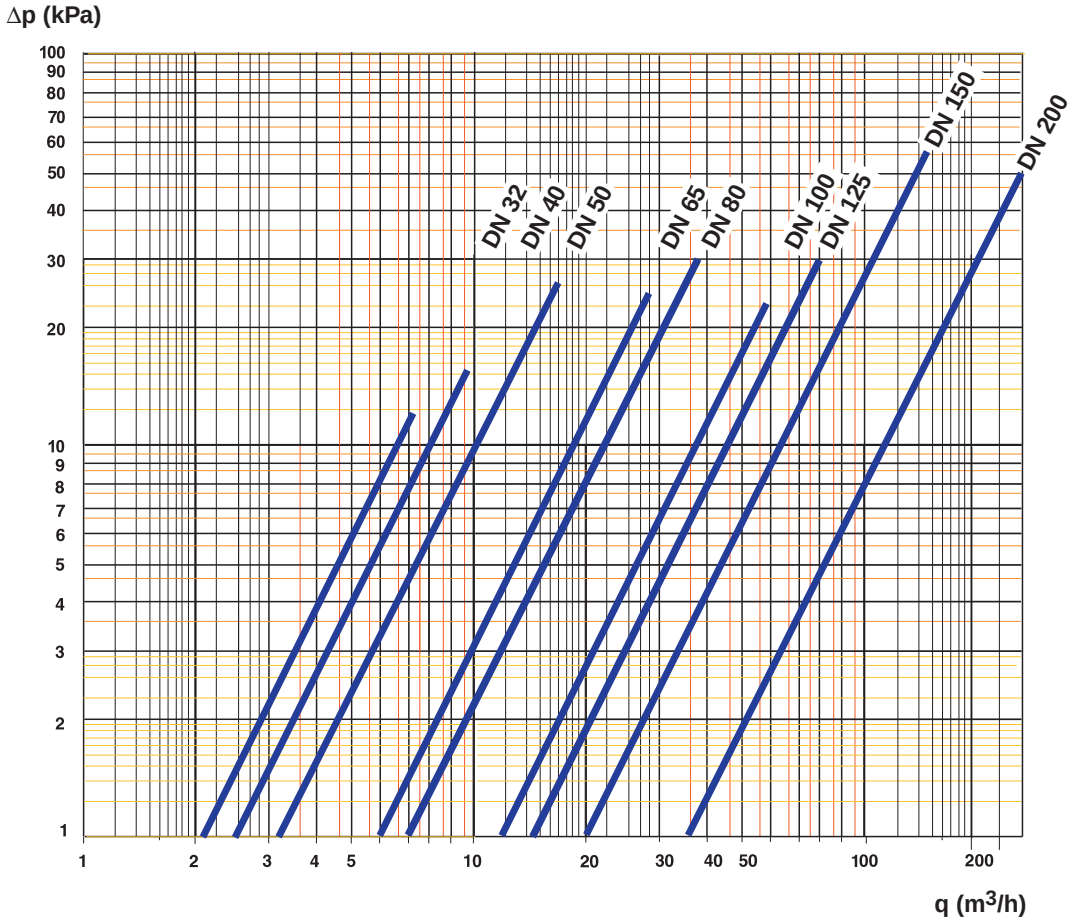


# Installation

The controller must be installed in the return pipe. It is recommended to install the controller in the horizontal pipeline with the actuator body facing downwards. Installation of a strainer upstream of the valve is recommended.
When filling, vent the actuator body by using the venting screws. The direction of the flow is shown by the arrow on the valve body. Connect capillary pipes (copper Ø6x1) always laterally to the pipe.

# Setting

**Differential pressure adjustment**

1. Release fixing screw (7).
2. Adjust differential pressure by turning the adjustment screw (6).
3. To increase the differential pressure, turn the adjustment screw clockwise (bottom view of screw).
4. At the end, tighten the fixing screw.

# Articles

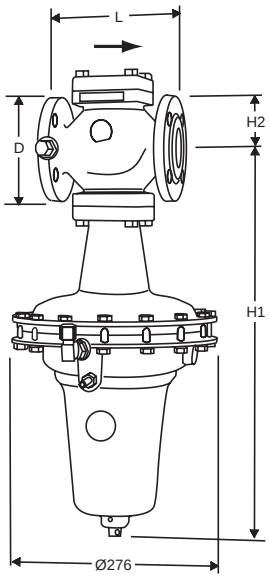


PN 25 (DN 32-50 and DN 80 also fit PN 16 flanges)

| Article No | DN | D | L | H1 | H2 | Kvs | Kg |
|---|---|---|---|---|---|---|---|
| **10-60 kPa** | | | | | | | |
| 52 780-132 | 32 | 140 | 180 | 535 | 102 | 21 | 38 |
| 52 780-140 | 40 | 150 | 200 | 535 | 102 | 25 | 39 |
| 52 780-150 | 50 | 165 | 230 | 560 | 116 | 32 | 46 |
| 52 780-165 | 65 | 185 | 290 | 580 | 135 | 55 | 55 |
| 52 780-180 | 80 | 200 | 310 | 592 | 149 | 70 | 66 |
| 52 780-190 | 100 | 235 | 350 | 680 | 175 | 120 | 88 |
| 52 780-191 | 125 | 270 | 400 | 690 | 190 | 145 | 105 |
| 52 780-192 | 150 | 300 | 480 | 775 | 227 | 230 | 235 |
| 52 780-193 | 200 | 360 | 600 | 822 | 260 | 360 | 297 |
| **50-150 kPa** | | | | | | | |
| 52 780-232 | 32 | 140 | 180 | 535 | 102 | 21 | 38 |
| 52 780-240 | 40 | 150 | 200 | 535 | 102 | 25 | 39 |
| 52 780-250 | 50 | 165 | 230 | 560 | 116 | 32 | 46 |
| 52 780-265 | 65 | 185 | 290 | 580 | 135 | 55 | 55 |
| 52 780-280 | 80 | 200 | 310 | 592 | 149 | 70 | 66 |
| 52 780-290 | 100 | 235 | 350 | 680 | 175 | 120 | 88 |
| 52 780-291 | 125 | 270 | 400 | 690 | 190 | 145 | 105 |
| 52 780-292 | 150 | 300 | 480 | 775 | 227 | 230 | 235 |
| 52 780-293 | 200 | 360 | 600 | 822 | 260 | 360 | 297 |
| **130-250 kPa** | | | | | | | |
| 52 780-332 | 32 | 140 | 180 | 535 | 102 | 21 | 38 |
| 52 780-340 | 40 | 150 | 200 | 535 | 102 | 25 | 39 |
| 52 780-350 | 50 | 165 | 230 | 560 | 116 | 32 | 46 |
| 52 780-365 | 65 | 185 | 290 | 580 | 135 | 55 | 55 |
| 52 780-380 | 80 | 200 | 310 | 592 | 149 | 70 | 66 |
| 52 780-390 | 100 | 235 | 350 | 680 | 175 | 120 | 88 |
| 52 780-391 | 125 | 270 | 400 | 690 | 190 | 145 | 105 |
| 52 780-392 | 150 | 300 | 480 | 775 | 227 | 230 | 235 |
| 52 780-393 | 200 | 360 | 600 | 822 | 260 | 360 | 297 |
| **100-400 kPa** | | | | | | | |
| 52 780-432 | 32 | 140 | 180 | 535 | 102 | 21 | 38 |
| 52 780-440 | 40 | 150 | 200 | 535 | 102 | 25 | 39 |
| 52 780-450 | 50 | 165 | 230 | 560 | 116 | 32 | 46 |
| 52 780-465 | 65 | 185 | 290 | 580 | 135 | 55 | 55 |
| 52 780-480 | 80 | 200 | 310 | 592 | 149 | 70 | 66 |
| 52 780-490 | 100 | 235 | 350 | 680 | 175 | 120 | 88 |
| 52 780-491 | 125 | 270 | 400 | 690 | 190 | 145 | 105 |
| 52 780-492 | 150 | 300 | 480 | 775 | 227 | 230 | 235 |
| 52 780-493 | 200 | 360 | 600 | 822 | 260 | 360 | 297 |

→ = Flow direction

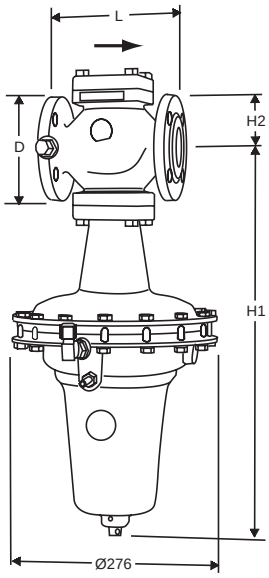


**PN 16**

| Article No | DN | D | L | H1 | H2 | Kvs | Kg |
|---|---|---|---|---|---|---|---|
| **10-60 kPa** | | | | | | | |
| 52 780-565 | 65 | 185 | 290 | 580 | 135 | 55 | 55 |
| 52 780-590 | 100 | 235 | 350 | 680 | 175 | 120 | 88 |
| 52 780-591 | 125 | 270 | 400 | 690 | 190 | 145 | 105 |
| 52 780-592 | 150 | 300 | 480 | 775 | 227 | 230 | 235 |
| 52 780-593 | 200 | 360 | 600 | 822 | 260 | 360 | 297 |
| **50-150 kPa** | | | | | | | |
| 52 780-665 | 65 | 185 | 290 | 580 | 135 | 55 | 55 |
| 52 780-690 | 100 | 235 | 350 | 680 | 175 | 120 | 88 |
| 52 780-691 | 125 | 270 | 400 | 690 | 190 | 145 | 105 |
| 52 780-692 | 150 | 300 | 480 | 775 | 227 | 230 | 235 |
| 52 780-693 | 200 | 360 | 600 | 822 | 260 | 360 | 297 |
| **130-250 kPa** | | | | | | | |
| 52 780-765 | 65 | 185 | 290 | 580 | 135 | 55 | 55 |
| 52 780-790 | 100 | 235 | 350 | 680 | 175 | 120 | 88 |
| 52 780-791 | 125 | 270 | 400 | 690 | 190 | 145 | 105 |
| 52 780-792 | 150 | 300 | 480 | 775 | 227 | 230 | 235 |
| 52 780-793 | 200 | 360 | 600 | 822 | 260 | 360 | 297 |
| **100-400 kPa** | | | | | | | |
| 52 780-865 | 65 | 185 | 290 | 580 | 135 | 55 | 55 |
| 52 780-890 | 100 | 235 | 350 | 680 | 175 | 120 | 88 |
| 52 780-891 | 125 | 270 | 400 | 690 | 190 | 145 | 105 |
| 52 780-892 | 150 | 300 | 480 | 775 | 227 | 230 | 235 |
| 52 780-893 | 200 | 360 | 600 | 822 | 260 | 360 | 297 |

→ = Flow direction

*The products, texts, photographs, graphics and diagrams in this document may be subject to alteration by TA Hydronics without prior notice or reasons being given.*
*For the most up to date information about our products and specifications, please visit www.tahydronics.com.*

*6-10-10 DA 50 04.2012*